belldinni
always solid
STYLE
FOR
YOUR
LIFE

# OUR PHILOSOPHY

The concept of Belldinni is based on many factors, each leading to successful work, with the most important of them being the professional staff.

The company's specialists have knowledge and skills, dedication and aspiration to perfection.

Modern production equipment provides consistently high quality products.

Quality products are the result of well-functioning production system.

The company offers its customers the widest range of designs in door slabs finishes.

Thus Belldinni successfully stated its mission - In each collection we create European quality doors, combining design, environmental friendliness and functionality.

## COLLECTIONS


- AVON ..... 1
- OPTIMA ..... 21
- CITY ..... 31
- MODULAR ..... 39
- LOUVER ..... 51
- OXFORD ..... 57
- SHAKER ..... 71
- FRENCH ..... 77
- NARVIKA ..... 89
- EXOTIC WOOD ..... 97
- EXTERIOR ..... 105
- INVISIBLE ..... 113
- PRIMED ..... 119
- LISTING INFORMATION .... 121

# AVON COLLECTION

# AVON
# COLLECTION

The Avon interior door collection brings a classical touch to refined high-tech style.

Straight lines, eco-friendly materials, plenty of modern technologies are combined with the best industry standards.

A gorgeous number of options are provided for choosing the quantity of panels, glazing, and decorative elements.

Stiles and rails doors provide quality, beauty and proven durability. We use linear pieces of lumber assembled into a single structure to ensure the functionality and durability of the slab.

Polypropylene finish gives interior doors a stylish, natural look. PP is an environmentally friendly material, resistant to moisture and temperature fluctuations.

Rubber seal

Solid core

Avon 07-04
Pecan Nutwood

Avon 07-02
Loire Ash

# AVAILABLE MODELS

Avon 07-01
Loire Ash

Avon 07-02
Loire Ash

Avon 07-03
Loire Ash

Avon 07-04
Loire Ash

Avon 07-05
Loire Ash

Avon 07-06
Loire Ash

Avon 07-07
Loire Ash

Avon 07-08
Loire Ash

Avon 07-07
Pecan Nutwood

# AVAILABLE MODELS

Avon 07-01
Pecan Nutwood

Avon 07-02
Pecan Nutwood

Avon 07-03
Pecan Nutwood

Avon 07-04
Pecan Nutwood

Avon 07-05
Pecan Nutwood

Avon 07-06
Pecan Nutwood

Avon 07-07
Pecan Nutwood

Avon 07-08
Pecan Nutwood

Avon 07-07
Veralinga Oak



# AVAILABLE MODELS

Avon 07-01
Veralinga Oak

Avon 07-02
Veralinga Oak

Avon 07-03
Veralinga Oak

Avon 07-04
Veralinga Oak

Avon 07-05
Veralinga Oak

Avon 07-06
Veralinga Oak

Avon 07-07
Veralinga Oak

Avon 07-08
Veralinga Oak

Avon 101
Veralinga Oak

Avon 07-07
Ribeira Ash



# AVAILABLE MODELS

Avon 07-01
Ribeira Ash

Avon 07-02
Ribeira Ash

Avon 07-03
Ribeira Ash

Avon 07-04
Ribeira Ash

Avon 07-05
Ribeira Ash

Avon 07-06
Ribeira Ash

Avon 07-07
Ribeira Ash

Avon 07-08
Ribeira Ash

Avon 101
Ribeira Ash

Avon 07-01
Gray Matte

# AVAILABLE MODELS

Avon 07-01
Gray Matte

Avon 07-02
Gray Matte

Avon 07-03
Gray Matte

Avon 07-04
Gray Matte

Avon 07-05
Gray Matte

Avon 07-06
Gray Matte

Avon 07-07
Gray Matte

Avon 07-08
Gray Matte

Avon 07-04
Black Matte

# AVAILABLE MODELS

Avon 07-01
Black Matte

Avon 07-02
Black Matte

Avon 07-03
Black Matte

Avon 07-04
Black Matte

Avon 07-05
Black Matte

Avon 07-06
Black Matte

Avon 07-07
Black Matte

Avon 07-08
Black Matte

# AVAILABLE MODELS

Avon 01
Veralinga Oak

Avon 01 1H
Veralinga Oak

Avon 01 2H
Veralinga Oak

Avon 01 2HN
Veralinga Oak

Avon 3H
Veralinga Oak

Avon 4H
Veralinga Oak

Avon 07
Veralinga Oak

Avon 07 1H
Veralinga Oak

Avon 07 2H
Veralinga Oak

Avon 07 2HN
Veralinga Oak

Avon 07 3H
Veralinga Oak

Avon 07 4H
Veralinga Oak

Avon 07 RN
Veralinga Oak

Avon 07 R
Veralinga Oak

Avon 07 2R
Veralinga Oak

Avon 07 2RN
Veralinga Oak

Avon 07 3R
Veralinga Oak

# AVAILABLE MODELS

Avon 01
Ribeira Ash

Avon 01 1H
Ribeira Ash

Avon 01 2H
Ribeira Ash

Avon 01 2HN
Ribeira Ash

Avon 3H
Ribeira Ash

Avon 4H
Ribeira Ash

Avon 07
Ribeira Ash

Avon 07 1H
Ribeira Ash

Avon 07 2H
Ribeira Ash

Avon 07 2HN
Ribeira Ash

Avon 07 3H
Ribeira Ash

Avon 07 4H
Ribeira Ash

Avon 07 RN
Ribeira Ash

Avon 07 R
Ribeira Ash

Avon 07 2R
RibeiraAsh

Avon 07 2RN
Ribeira Ash

Avon 07 3R
Ribeira Ash

# OPTIMA COLLECTION

Modern design, high standards of craftsmanship, and a color palette selected in line with the newest trends are the advantageous characteristics of the new Optima collection.

Whether you are a builder or a house owner, a well-balanced combination of price and quality is worth your attention.

The doors consist of a pine frame, an eco-friendly solid core material, and a high-density wood fiber mixed in with polyurethane resin and wax to secure high sound and thermal insulation. Such filling provides additional durability, noise reduction, and thermal insulation.

Solid core

Rubber seal

## AVAILABLE MODELS

Optima 2U
Snow White

Optima 2V
Snow White

Optima 2H
Snow White

Optima 4H
Snow White

Optima
Snow White

Optima 2V
Ribeira Ash

# AVAILABLE MODELS

Optima 4H
Ribeira Ash

Optima
Ribeira Ash

Optima 2H
Ribeira Ash

Optima 2U
Ribeira Ash

Optima 2V
Ribeira Ash

Optima
Pecan Nutwood

# AVAILABLE MODELS

Optima 4H
Pecan Nutwood

Optima 2U
Pecan Nutwood

Optima 2V
Pecan Nutwood

Optima
Pecan Nutwood

Optima 2H
Pecan Nutwood

Optima
Loire Ash

# AVAILABLE MODELS

Optima 2H
Loire Ash

Optima 4H
Loire Ash

Optima 2U
Loire Ash

Optima 2V
Loire Ash

Optima
Loire Ash

Optima 4H
Black strips
Shambor

# AVAILABLE MODELS

Optima 2H
Shambor

Optima 4H
Shambor

Optima 2U
Shambor

Optima 2V
Shambor

Optima
Shambor

CITY COLLECTION

# CITY COLLECTION

Feel the city's pulse and find yourself in the center of urban events without leaving your cozy room. Enjoy our modern City collection's aesthetic forms, smooth surfaces, and monochrome palettes.

It embodies a combination of the best trends in the door industry: extreme simplicity and quality materials. The aluminum moldings on the slabs emphasize the strictness and luxury of the interior doors.

A quality pine frame and a solid core inside form the basis of strong and durable construction.

The doors are professionally coated with an eco-friendly polypropylene finish, a material resistant to moisture and temperature fluctuations.

3D WOOD LOOK — Ultra modern Evo Pro finish

Solid core

## AVAILABLE MODELS

Palladio 2H
Gray Oak

Palladio 4H
Gray Oak

Palladio 2U
Gray Oak

Palladio 2V
Gray Oak

# AVAILABLE MODELS

Palladio
Bianco Noble

Palladio 4H
Bianco Noble

Palladio 2H
Bianco Noble

Palladio 2U
Bianco Noble

Palladio 2V
Bianco Noble

# AVAILABLE MODELS

Unica 2U
Bianco Noble

Unica 2V
Bianco Noble

Unica
Bianco Noble

Unica 2V
Bianco Noble



# AVAILABLE MODELS

Unica 2U
Gray Oak

Unica 2V
Gray Oak

Unica
Gray Oak

MODULAR COLLECTION

# AVAILABLE MODELS

Ermi
Shambor

Alba
Shambor

Leora
Shambor

Perla
Shambor

Vita
Shambor

Mirella
Shambor

Leti
Shambor

Alda
Shambor

Romi
Shambor

Dome
Shambor

Rita
Shambor

Dora
Shambor

Gina
Shambor

Edna
Shambor

# MODULAR COLLECTION

The Modular collection combines quality materials, a universal shade, and strict geometric shapes, refreshing the interior and corresponding to minimalist fashion trends. The door's simple yet flawless design will harmonize with any room and home decor.

Each part of the doors is primarily coated with a technologically advanced Evo Pro finish and predrilled. Then, all pieces are carefully hand-fitted together with the industry's finest adhesives on all connections.

- Eco-friendly PP finish
- Matching jambs and casings
- Rubber seal
- Frosted glass

# AVAILABLE MODELS

Alda
Bianco Noble

Ermi
Bianco Noble

Alba
Bianco Noble

Leora
Bianco Noble

Della
Bianco Noble

Gina
Bianco Noble

Mirella
Bianco Noble

Leti
Bianco Noble

Dome
Bianco Noble

Rita
Bianco Noble

Perla
Bianco Noble

Romi
Bianco Noble

Edna
Bianco Noble

Vita
Bianco Noble

# AVAILABLE MODELS

Leora
Gray Oak

Vita
Gray Oak

Della
Gray Oak

Mirella
Gray Oak

Edna
Gray Oak

Perla
Gray Oak

Romi
Gray Oak

Leti
Gray Oak

Dora
Gray Oak

Rita
Gray Oak

Dome
Gray Oak

Alba
Gray Oak

Leora
Gray Oak

Kina
Gray Oak

Gina
Gray Oak

Alda
Gray Oak

Ermi
Gray Oak

# AVAILABLE MODELS

Gina
Gray Matte

Alba
Gray Matte

Alda
Gray Matte

Ermi
Gray Matte

Kina
Gray Matte

Leora
Gray Matte

Mirella
Gray Matte

Perla
Gray Matte

Della
Gray Matte

Siah
Gray Matte

Rita
Gray Matte

Romi
Gray Matte

Della
Black Matte

# AVAILABLE MODELS

Gina
Black Matte

Alba
Black Matte

Alda
Black Matte

Ermi
Black Matte

Kina
Black Matte

Leora
Black Matte

Mirella
Black Matte

Perla
Black Matte

Della
Black Matte

Siah
Black Matte

Rita
Black Matte

Romi
Black Matte

LOUVER COLLECTION

# LOUVER COLLECTION

To create the perfect door for wardrobes, pantries, and other rooms, we used only quality materials and a unique panel design that allows air circulation.

Despite the small cavities that protect the room from mustiness, the slab has good sound and heat insulation thanks to the MDF filler.

- Custom order
- Scratch resistant
- Rubber seal
- Airflow

Louver
Ribeira Ash

# AVAILABLE MODELS

Louver
Snow White

Louver
Snow White

Louver
Ribeira Ash

Louver
Loire Ash

Louver
Shambor

Louver
Pecan Nutwood

Louver
Gray Matte

Louver
Gray Oak

Louver
Veralinga Oak

Louver
Black Matte

OXFORD COLLECTION

Oxford DUO 07 R
Snow White

# OXFORD
## COLLECTION

The Oxford collection combines straight lines, eco-friendly materials, and many modern technologies with the best industry standards. Stile and rail doors with a narrow fillet designed to symbolize the finest traditions of American craftsmanship.

- Scratch resistant
- Rubber seal
- Matching jambs and casings

Oxford UNO 07 2RN
Snow White

Oxford UNO 07 2RN
Snow White

Oxford DUO 07 2RN
Snow White



# AVAILABLE MODELS

Oxford UNO 07
Snow White

Oxford DUO 07
Snow White

Oxford UNO 07 R
Snow White

Oxford DUO 07 R
Snow White

Oxford UNO 07 RN
Snow White

Oxford DUO 07 RN
Snow White

Oxford UNO 07 2R
Snow White

Oxford DUO 07 2R
Snow White

Oxford UNO 07 3R
Snow White

Oxford DUO 07 3R
Snow White

Oxford UNO 07 4R
Snow White

Oxford DUO 07 4R
Snow White

Oxford DUO 07 2R
Ribeira Ash

Oxford UNO 07 2RN
Ribeira Ash

Oxford DUO 07 2RN
Ribeira Ash



# AVAILABLE MODELS

Oxford UNO 07
Ribeira Ash

Oxford DUO 07
Ribeira Ash

Oxford UNO 07 R
Ribeira Ash

Oxford DUO 07 R
Ribeira Ash

Oxford UNO 07 RN
Ribeira Ash

Oxford DUO 07 RN
Ribeira Ash

Oxford UNO 07 2R
Ribeira Ash

Oxford DUO 07 2R
Ribeira Ash

Oxford UNO 07 3R
Ribeira Ash

Oxford DUO 07 3R
Ribeira Ash

Oxford UNO 07 4R
Ribeira Ash

Oxford DUO 07 4R
Ribeira Ash

# AVAILABLE MODELS

Oxford UNO 07
Veralinga Oak

Oxford DUO 07
Veralinga Oak

Oxford UNO 07 R
Veralinga Oak

Oxford DUO 07 R
Veralinga Oak

Oxford UNO 07 RN
Veralinga Oak

Oxford DUO 07 RN
Veralinga Oak

Oxford UNO 07 2R
Veralinga Oak

Oxford DUO 07 2R
Veralinga Oak

Oxford UNO 07 2RN
Veralinga Oak

Oxford DUO 07 2RN
Veralinga Oak

Oxford UNO 07 3R
Veralinga Oak

Oxford DUO 07 3R
Veralinga Oak

Oxford UNO 07 4R
Veralinga Oak

Oxford UNO 07 4R
Veralinga Oak

Oxford DUO 07 4R
Veralinga Oak

Oxford UNO 07
Pecan Nutwood

Oxford UNO 07 2RN
Pecan Nutwood

Oxford DUO 07 2RN
Pecan Nutwood



# AVAILABLE MODELS

Oxford UNO 07
Pecan Nutwood

Oxford DUO 07
Pecan Nutwood

Oxford UNO 07 R
Pecan Nutwood

Oxford DUO 07 R
Pecan Nutwood

Oxford UNO 07 RN
Pecan Nutwood

Oxford DUO 07 RN
Pecan Nutwood

Oxford UNO 07 2R
Pecan Nutwood

Oxford DUO 07 2R
Pecan Nutwood

Oxford UNO 07 3R
Pecan Nutwood

Oxford DUO 07 3R
Pecan Nutwood

Oxford UNO 07 4R
Pecan Nutwood

Oxford DUO 07 4R
Pecan Nutwood

# AVAILABLE MODELS

Oxford UNO 07
Loire Ash

Oxford DUO 07
Loire Ash

Oxford UNO 07 R
Loire Ash

Oxford DUO 07 R
Loire Ash

Oxford UNO 07 RN
Loire Ash

Oxford DUO 07 RN
Loire Ash

Oxford UNO 07 2R
Loire Ash

Oxford DUO 07 2R
Loire Ash

Oxford UNO 07 2RN
Loire Ash

Oxford DUO 07 2RN
Loire Ash

Oxford UNO 07 3R
Loire Ash

Oxford DUO 07 3R
Loire Ash

Oxford UNO 07 RN
Loire Ash

Oxford UNO 07 4R
Loire Ash

Oxford DUO 07 4R
Loire Ash

SHAKER COLLECTION

Shaker 2 Panel
Bianco Noble

# SHAKER COLLECTION

Traditional style and impeccable quality allow the door from the Shaker collection to become an accent element of home design in any room. In addition, the minimalist model can be embellished with elegant hardware.

Stile and rail doors symbolize the best traditions of American craftsmanship. We use linear pieces of lumber assembled into a single structure to ensure the functionality and durability of the slab.

MDF panels provide reliable soundproofing and keep the heat inside the room. Furthermore, the door has good sound insulation, especially with the automatic threshold.

# AVAILABLE MODELS

Shaker 1 Panel
Snow White

Shaker 1 Panel
Bianco Noble

Shaker 1 Panel
Ribeira Ash

Shaker 1 Panel
Gray Matte

Shaker 1 Panel
Black Matte

Shaker 1 Panel
Gray Oak

Shaker 1 Panel
Veralinga Oak

Shaker 1 Panel
Pecan Nutwood

Shaker 1 Panel
Loire Ash

Shaker 1 Panel
Shambor

# AVAILABLE MODELS

Shaker 2 Panel
Snow White

Shaker 2 Panel
Bianco Noble

Shaker 2 Panel
Ribeira Ash

Shaker 2 Panel
Gray Matte

Shaker 2 Panel
Black Matte

Shaker 2 Panelr
Gray Oak

Shaker 2 Panel
Veralinga Oak

Shaker 2 Panel
Pecan Nutwood

Shaker 2 Panel
Loire Ash

Shaker 2 Panel
Shambor

# FRENCH COLLECTION

Palladio 4 Lite
Gray Oak

Palladio 202
Gray Oak

Palladio 207
Gray Oak

Palladio 5 Lite
Gray Oak



## AVAILABLE MODELS

Palladio 202 4H
Gold Strips
Gray Oak

Palladio 202 4H
Silver Strips
Gray Oak

Palladio 3 Lite
Gray Oak

Palladio 4 Lite
Gray Oak

Palladio 10 Lite
Gray Oak

Palladio 8 Lite
Gray Oak

# FRENCH COLLECTION

Want to create a bit of a separation between the rooms in your house, but still let the light flow through?

Want to add architectural interest to a boring or unremarkable space? A pair of French doors is perfect for that!

The Belldinni French door collection includes a range of expertly crafted doors available in a variety of wood finishes, styles and glass options to complement any interior.

Matching jambs and casings

Frosted glass

Tempered safety glass

Palladio 207
Bianco Noble



# AVAILABLE MODELS

Palladio 10 Lite
Bianco Noble

Palladio 5 Lite
Bianco Noble

Palladio 202
Bianco Noble

Palladio 207
Bianco Noble

Palladio 8 Lite
Bianco Noble

Palladio 3 Lite
Bianco Noble

Palladio 4 Lite
Bianco Noble

Palladio 202 4H
Black Strips
Bianco Noble

Palladio 202 4H
Silver Strips
Bianco Noble

Palladio 202 4H
Gold Strips
Bianco Noble

Smart Pro 3 Lite
Polar White

# AVAILABLE MODELS

Smart Pro H3G 4H
Black Strips
Polar White

Smart Pro H3G 4H
Silver Strips
Polar White

Smart Pro H3G 4H
Gold Strips
Polar White

Smart Pro 4 Lite
Polar White

Smart Pro 3 Lite
Polar White

Smart Pro 8 Lite
Polar White

Smart Pro 207
Polar White

Smart Pro 5 Lite
Polar White

Smart Pro 10 Lite
Polar White

French 3 Lite
Loire Ash

French 3 Lite
Pecan Nutwood

## AVAILABLE MODELS

Avon 207
Loire Ash

French 3 Lite
Loire Ash

Avon 4 Lite
Loire Ash

French 5 Lite
Loire Ash

French 8 Lite
Loire Ash



## AVAILABLE MODELS

Avon 207
Pecan Nutwood

French 3 Lite
Pecan Nutwood

Avon 4 Lite
Pecan Nutwood

French 5 Lite
Pecan Nutwood

French 8 Lite
Pecan Nutwood

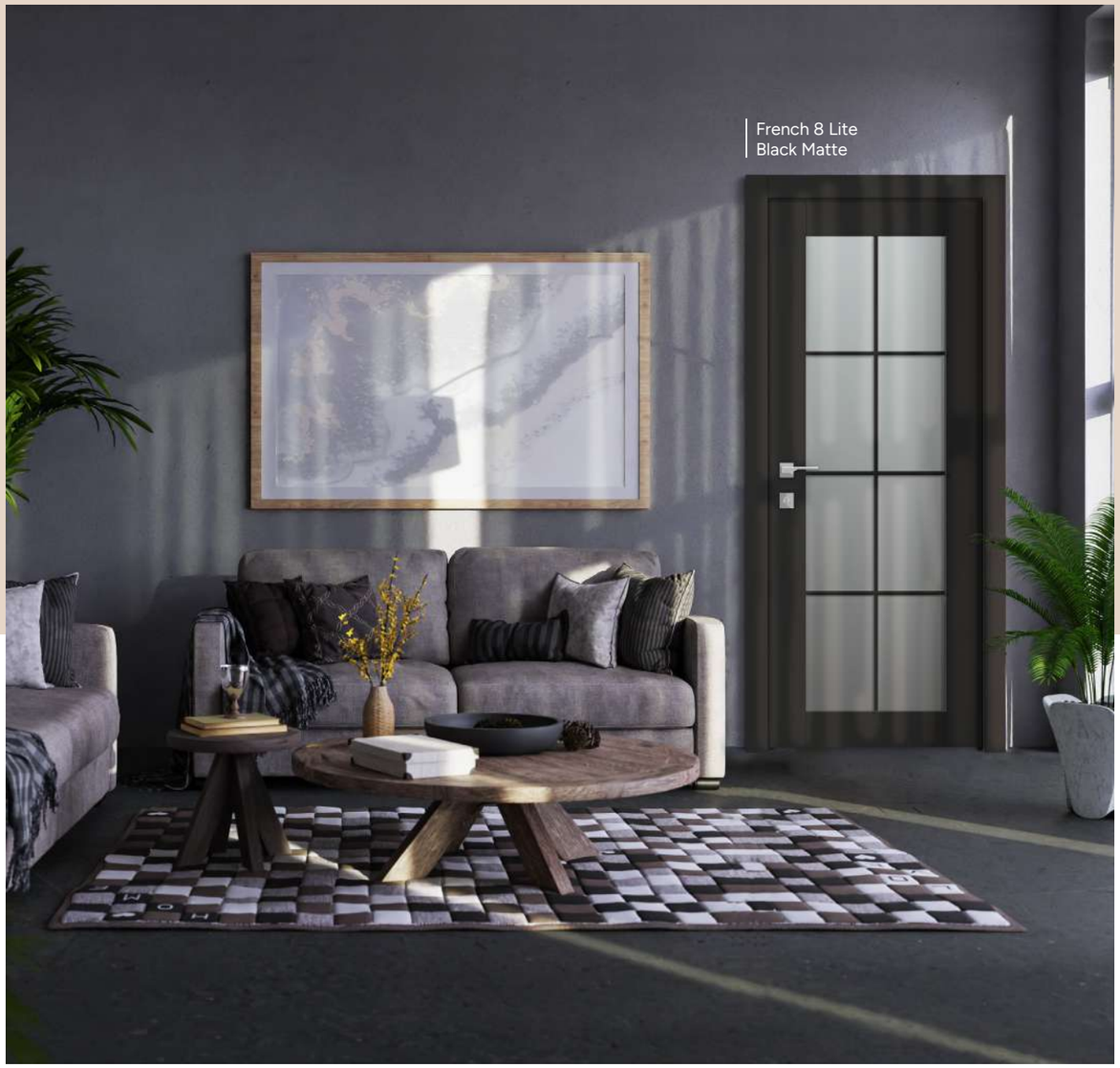


## AVAILABLE MODELS

Avon 207
Black Matte

French 3 Lite
Black Matte

Avon 4 Lite
Black Matte

French 5 Lite
Black Matte

French 8 Lite
Black Matte

## AVAILABLE MODELS

Avon 207
Gray Matte

French 3 Lite
Gray Matte

French 4 Lite
Gray Matte

Avon 5 Lite
Gray Matte

French 8 Lite
Gray Matte

belldinni
always solid
NARVIKA
COLLECTION

Smart Pro 2V
Polar White

# NARVIKA COLLECTION

Simplicity and functionality of the Scandinavian style that emerged in the early 20th century in the five Nordic countries of Denmark, Finland, Iceland, Norway, and Sweden is reflected in the simple clean lines of the Narvika collection.

The peculiarity of these doors is a high quality polar white matte finish obtained from the combination of polyurethane primers and lacquers. By applying several layers of lacquer with interim priming and grinding, we achieve the ideal smoothness of the surface.

Additionally, the advanced lacquer finish protects the doors from damage and moisture.

- Matching jambs and casings
- Premium lacquered finish
- Rubber seal

# AVAILABLE MODELS

Smart Pro 2V
Polar White

Smart Pro 208
Polar White

Smart Pro 2U
Polar White

Smart Pro 2H
Polar White

Smart Pro 4H
Polar White

Arvika
Polar White

Smart Pro 3 Lite
Polar White

# AVAILABLE MODELS

Smart Pro H3G 4H
Black Strips
Polar White

Smart Pro H3G 4H
Silver Strips
Polar White

Smart Pro H3G 4H
Gold Strips
Polar White

Smart Pro 4 Lite
Polar White

Smart Pro 3 Lite
Polar White

Smart Pro 8 Lite
Polar White

Smart Pro 207
Polar White

Smart Pro 5 Lite
Polar White

Smart Pro 10 Lite
Polar White

EXOTIC WOOD VENEER COLLECTION

# EXOTIC WOOD VENEER COLLECTION

There are no substitutes for real wood. Every door in this collection starts exactly the same way: with the careful selection of quality materials distinguished by the organic beauty of exotic wood veneer.

The natural tones and the luxury of the real wood finish are gently entwined to bring you the feeling of peace and comfort.

- Rubber seal
- Matching jambs and casings
- Solid core
- Natural wood veneer

# AVAILABLE MODELS

Avanti 207
Black Apricot

Avanti 10 Lite
Black Apricot

Avanti 8 Lite
Black Apricot

Avanti 5 Lite
Black Apricot

Avanti 4 Lite
Black Apricot

Avanti 3 Lite
Black Apricot

Avanti 202 4H
Gold Strips
Black Apricot

Avanti 202 4H
Silver Strips
Black Apricot

Avanti 202
Black Apricot

Avanti 207
Black Apricot

# AVAILABLE MODELS

Avanti 207
Black Apricot

Avanti 10 Lite
Black Apricot

Avanti 8 Lite
Black Apricot

Avanti 5 Lite
Black Apricot

Avanti 4 Lite
Black Apricot

Avanti 3 Lite
Black Apricot

Avanti 202
Gold Strips
Black Apricot

Avanti 202
Silver Strips
Black Apricot

Avanti 202
Black Apricot

Avanti 207
Black Apricot

EXTERIOR DOOR COLLECTION

# EXTERIOR DOOR COLLECTION

The exterior door collection features energy-saving, weatherproof models with a modern design. Each door is decorated with translucent frosted glass inserts, representing a triple-sealed unit with two chambers: it is tempered on both sides and has silkscreen printing using ceramic inks.

Aura, Zephyr, and Argos have galvanized steel door frames with two thermal breaks, giving the door high thermal insulation properties and keeping your home warm even at very low temperatures.

Quality and durable exterior doors, made of the best materials, are a long-term investment for your property, as they provide security (37 dB) and protection from harsh weather conditions, dust, moisture, and noise.

| Argos

Zephyr
Anthracite

# AVAILABLE MODELS

Argos
Black

Argos
Anthracite

Argos
Brown

Aura
Black

Aura
Anthracite

Aura
Brown

Zephyr
Black

Zephyr
Anthracite

Zephyr
Brown

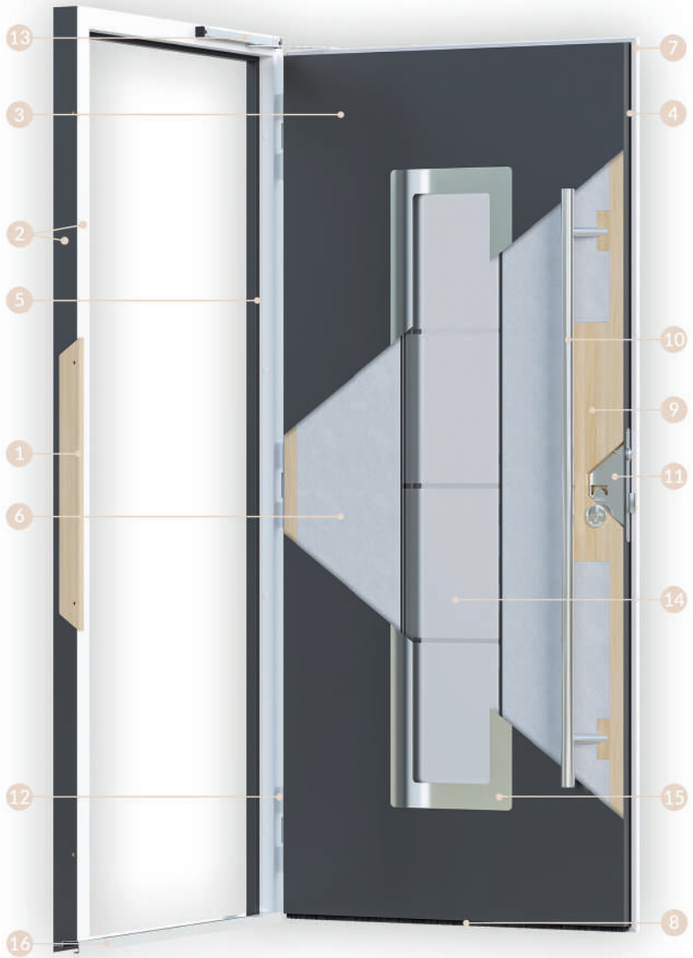


1. Bar (softwood)
2. Zinc-galvanized steel
3. Powder paint
4. Thermal breaks
5. Seal Schlegel Q-Ion 3053
6. High-density weatherproof polystyrene foam
7. Seal QN 319
8. Brush seal
9. Fitting block for the main lock and deadbolt
10. Railing handle
11. HAFELE ball and catch wind resistant lock
12. 3D-adjustable hinges by Dr. Hahn
13. GEZE door closer (optional)
14. Triple glazed sealed unit with two chambers
15. Decorative stainless steel overlays
16. Stainless steel threshold reinforced with a zinc-galvanised steel frame

# TECH DESCRIPTION

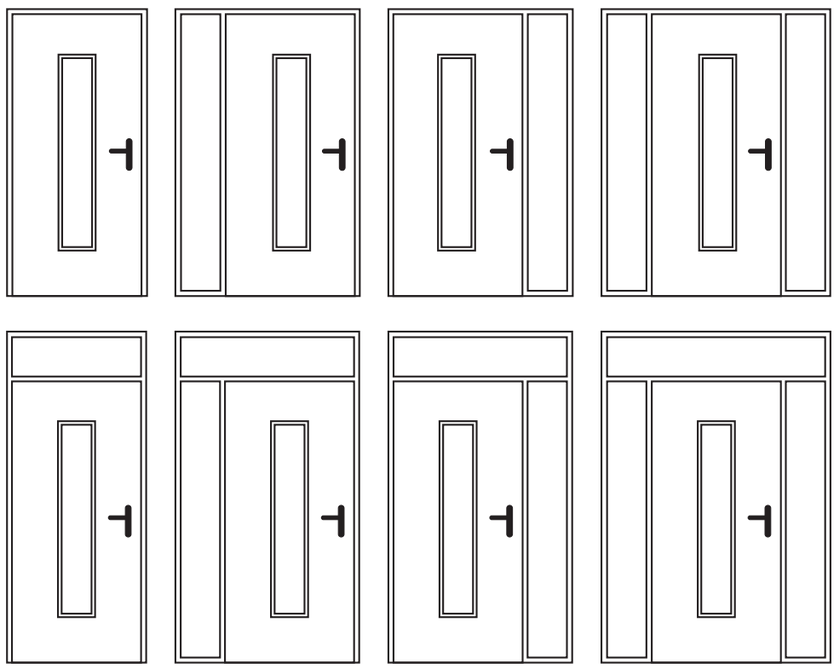



# AVAILABLE MODELS

Brown (Br)

Black (B)

Anthracite (A)

White (W)

# EXTERIOR DOORS

| | SLAB THICKNESS | SLAB HEIGHT | COLORS | | |
|---|---|---|---|---|---|
| | | | Anthracite/White (A/W) | Black/White (B/W) | Brown/White (Br/W) |
| Modern Front Steel Door ARGOS | 2 1/16 | 79 7/8 | ● | ● | ● |
| Modern Front Steel Door ZEPHYR | 2 1/16 | 79 7/8 | ● | ● | ● |
| Modern Front Steel Door AURA | 2 1/16 | 79 7/8 | ● | ● | ● |

INVISIBLE FRAME

# INVISIBLE FRAME

Create striking lines in your design and implement clean, minimalistic concepts with the Belldinni concealed door frame system. Give your doors an excellent and trendy appearance with a frameless design flush-in-the-wall.

The pre-finished door is made from a solid slab and adapted for various construction projects. The environmentally friendly polypropylene (PP) finish provides a smooth surface and protects the slab from scratches, moisture, and temperature fluctuations. A hollow metal frame ensures the strength and durability needed for commercial usage.

Frameless and trimless look

Flush with the Wall

Concealed hinges

# INVISIBLE FRAME

| | |
|---|---|
| Expected Door Slab Thinckness | The frame can be used only with 1 3/4" thick door slabs |
| Swing Directions | Left / right inswing and left / right outswing |
| Type of finish | Wear-Resistant Primer |
| Stock Color | White Primer |
| Frame Construction | Adjustable Split-type Concealed Frame |
| Frame Material | Cold rolled galvanized steel |
| Jamb Width | 4 23/32'' |
| Jamb steel thickness | 3/64 |
| Thickness of the wall covered by jamb | Regular: 4 3/8″ - 4 13/16″; 4 5/8″ - 5″; 6 7/16″ - 6 13/16″; 6 7/8″ - 7″<br>Reverse: 4 3/8″ - 4 13/16″; 4 5/8″ - 5″; 4 7/8″ - 5 1/4″; 6 7/16″ - 6 13/16″; 6 7/8″ - 7″ |

# PRIMED COLLECTION

Flush-mounted primed doors are the perfect choice for stylish interiors. Thanks to the aesthetic sleek design and the absence of protruding parts, they visually expand the space of a house or an apartment. Primed doors fit harmoniously into any room or become an accent element of the living space.

You can paint the primed door in any shade, wallpaper or decorate it with plaster.



Wallpaper the door to make it completely invisible

Decorate with plaster to create a unique design

Paint in the wall color or a contrasting shade

Paint with a spray gun

## AVAILABLE MODELS

White Door For Painting
White

Shaker 1 Panel
Primed

Shaker 2 Panel
Primed

## DOOR FINISH

Painting

Plastering

Wallpapering

belldinni
always solid

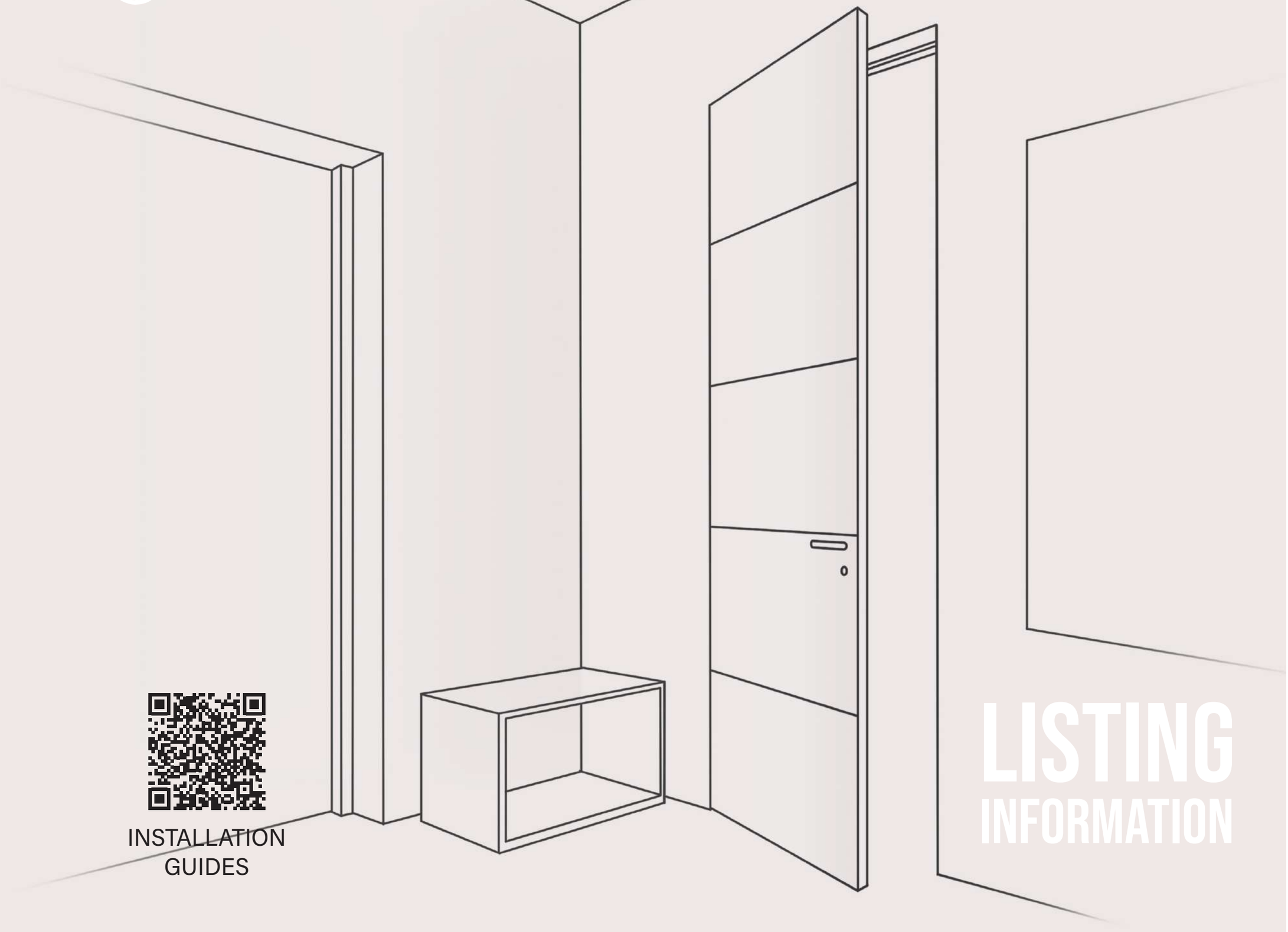

# LISTING INFORMATION

INSTALLATION GUIDES

# NARVIKA COLLECTION

| | SLAB THICKNESS | SLAB HEIGHT | | | | COLORS | | | | | | | | AVAILABLE DOOR WIDTH | SMART SWEEP | DOOR CONFIGURATION OPTIONS | | | | | | |
|---|---|---|---|---|---|---|---|---|---|---|---|---|---|---|---|---|---|---|---|---|---|---|
| | | 80 | 84 | 92 1/2 | 96 | Polar White (PW) | Pearl (P) | Silk (S) | Graphite (Gr) | Light Gray (LG) | Anthracite/White (A/W) | Black/White (B/W) | Brown/White (B/W) | | | Single Swing | Double Swing | Pocket | Bypass | Bi-fold | Magic | Barn |
| DOOR SLAB Smart Pro | 1 3/4 | IN STOK | IN STOK | IN STOK | IN STOK | IN STOK | ● | ● | ● | ● | ● | ● | ● | 18/24/28/30/32/36/42 | ● | ● | ● | ● | ● | ● | 32" and up | ● |
| DOOR SLAB Smart Pro 4H | 1 3/4 | IN STOK | IN STOK | IN STOK | IN STOK | IN STOK | ● | ● | ● | ● | ● | ● | ● | 18/24/28/30/32/36/42 | ● | ● | ● | ● | ● | ● | 32" and up | ● |
| DOOR SLAB Smart Pro 2H | 1 3/4 | IN STOK | IN STOK | IN STOK | IN STOK | IN STOK | ● | ● | ● | ● | ● | ● | ● | 18/24/28/30/32/36/42 | ● | ● | ● | ● | ● | ● | 32" and up | ● |
| DOOR SLAB Smart Pro 2U | 1 3/4 | IN STOK | IN STOK | IN STOK | IN STOK | IN STOK | ● | ● | ● | ● | ● | ● | ● | 18/24/28/30/32/36/42 | ● | ● | ● | | | ● | 32" and up | ● |
| DOOR SLAB Smart Pro 2V | 1 3/4 | IN STOK | IN STOK | IN STOK | IN STOK | IN STOK | ● | ● | ● | ● | ● | ● | ● | 18/24/28/30/32/36/42 | ● | ● | ● | | | ● | 32" and up | ● |
| DOOR SLAB Arvika | 1 3/4 | IN STOK | IN STOK | | IN STOK | IN STOK | ● | ● | ● | ● | ● | ● | ● | 18/24/28/30/32/36/42 | ● | ● | ● | ● | ● | ● | 32" and up | ● |
| DOOR SLAB Smart Pro 208 | 1 3/4 | IN STOK | ● | | ● | IN STOK | ● | ● | ● | ● | ● | ● | ● | 18/24/28/30/32/36 | | ● | ● | 80" only | 80" only | 80" only | | 80" only |

# LOUVER COLLECTION

| | SLAB THICKNESS | SLAB HEIGHT | | | | COLORS | | | | | | | | | | AVAILABLE DOOR WIDTH | DOOR CONFIGURATION OPTIONS | | | | | |
|---|---|---|---|---|---|---|---|---|---|---|---|---|---|---|---|---|---|---|---|---|---|---|
| | | 80 | 84 | 92 1/2 | 96 | Snow White (SW) | Shambor (Sh) | Veralinga Oak (VO) | Ribeira Ash (RA) | Loire Ash (LA) | Pecan Nutwood (PN) | Black Matte (BM) | Gray Matte (GM) | Gray Oak (GO) | Bianco Noble (BN) | | Single Swing | Double Swing | Pocket | Bypass | Bi-fold | Barn |
| DOOR SLAB Louver | 1 9/16 | IN STOK | IN STOK | IN STOK | IN STOK | | | | | | | | | IN STOK | IN STOK | 18/24/28/30/32/36 | ● | ● | ● | ● | ● | ● |
| DOOR SLAB Louver | 1 3/4 | IN STOK | IN STOK | IN STOK | IN STOK | IN STOK | IN STOK | IN STOK | IN STOK | IN STOK | IN STOK | IN STOK | IN STOK | | | 18/24/28/30/32/36 | ● | ● | ● | ● | ● | ● |

# SHAKER COLLECTION

| | SLAB THICKNESS | SLAB HEIGHT | | | | COLORS | | | | | | | | | | | | AVAILABLE DOOR WIDTH | SMART SWEEP | DOOR CONFIGURATION OPTIONS | | | | | |
|---|---|---|---|---|---|---|---|---|---|---|---|---|---|---|---|---|---|---|---|---|---|---|---|---|---|
| | | 80 | 84 | 92 1/2 | 96 | Snow White (SW) | Shambor (Sh) | Veralinga Oak (VO) | Ribeira Ash (RA) | Loire Ash (LA) | Pecan Nutwood (PN) | Black Matte (BM) | Gray Matte (GM) | Primed | Gray Oak (GO) | Bianco Noble (BN) | | | Single Swing | Double Swing | Pocket | Bypass | Bi-fold | Barn |
| DOOR SLAB Shaker 1 Panel | 1 9/16 | IN STOK | IN STOK | IN STOK | IN STOK | | | | | | | | | | IN STOK | IN STOK | 18/24/28/30/32/36 | ● | ● | ● | ● | ● | ● | ● | ● |
| DOOR SLAB Shaker 2 Panel | 1 9/16 | IN STOK | IN STOK | IN STOK | IN STOK | | | | | | | | | | IN STOK | IN STOK | 18/24/28/30/32/36 | ● | ● | ● | ● | ● | ● | ● | ● |
| DOOR SLAB Shaker 1 Panel | 1 3/4 | IN STOK | IN STOK | IN STOK | IN STOK | IN STOK | IN STOK | IN STOK | IN STOK | IN STOK | IN STOK | IN STOK | IN STOK | IN STOK | IN STOK | | | 18/24/28/30/32/36 | ● | ● | ● | ● | ● | ● | ● |
| DOOR SLAB Shaker 2 Panel | 1 3/4 | IN STOK | IN STOK | IN STOK | IN STOK | IN STOK | IN STOK | IN STOK | IN STOK | IN STOK | IN STOK | IN STOK | IN STOK | IN STOK | | | | 18/24/28/30/32/36 | ● | ● | ● | ● | ● | ● | ● |



# FRENCH COLLECTION

| | SLAB THICKNESS | GLASS | SLAB HEIGHT | | | | COLORS | | | | | | | | AVAILABLE DOOR WIDTH | DOOR CONFIGURATION OPTIONS | | | | | |
|---|---|---|---|---|---|---|---|---|---|---|---|---|---|---|---|---|---|---|---|---|---|
| | | | 80 | 84 | 96 | 92 1/2 | Black Apricot (BA) | Polar White (PW) | Pecan Nutwood (PN) | Loire Ash (LA) | Ribeira Ash (RA) | Veralinga Oak (VO) | Bianco Noble (BN) | Gray Oak (GO) | | Single Swing | Double Swing | Pocket | Bypass | Bi-fold | Barn |
| **Palladio French Doors** | | | | | | | | | | | | | | | | | | | | | |
| DOOR SLAB Palladio 207 | 1 9/16 | White frosted/ Clear | IN STOK | IN STOK | IN STOK | IN STOK | | | | | | | IN STOK | IN STOK | 18/24/28/30/32/36 | ● | ● | 80" only | 80" only | 80" only | 80" only |
| DOOR SLAB Palladio 10 Lite | 1 9/16 | White frosted/ Clear | IN STOK | IN STOK | IN STOK | IN STOK | | | | | | | IN STOK | IN STOK | 18/24/28/30/32/36 | ● | ● | 80" only | 80" only | 80" only | 80" only |
| DOOR SLAB Palladio 5 Lite | 1 9/16 | White frosted/ Clear | IN STOK | IN STOK | IN STOK | IN STOK | | | | | | | IN STOK | IN STOK | 18/24/28/30/32/36 | ● | ● | 80" only | 80" only | 80" only | 80" only |
| **Avanti French Doors** | | | | | | | | | | | | | | | | | | | | | |
| DOOR SLAB Avanti 207 | 1 3/4 | White frosted/ Clear | IN STOK | IN STOK | IN STOK | | IN STOK | | | | | | | | 18/24/28/30/32/36 | ● | ● | 80" only | 80" only | 80" only | 80" only |
| DOOR SLAB Avanti 10 Lite | 1 3/4 | White frosted/ Clear | IN STOK | IN STOK | IN STOK | | IN STOK | | | | | | | | 18/24/28/30/32/36 | ● | ● | 80" only | 80" only | 80" only | 80" only |
| DOOR SLAB Avanti 5 Lite | 1 3/4 | White frosted/ Clear | IN STOK | IN STOK | IN STOK | | IN STOK | | | | | | | | 18/24/28/30/32/36 | ● | ● | 80" only | 80" only | 80" only | 80" only |
| DOOR SLAB Avanti 202 | 1 3/4 | White frosted/ Clear | IN STOK | IN STOK | IN STOK | | IN STOK | | | | | | | | 18/24/28/30/32/36 | ● | ● | | | 80" only | 80" only |
| DOOR SLAB Avanti 202 4H | 1 3/4 | White frosted/ Clear | IN STOK | IN STOK | IN STOK | | IN STOK | | | | | | | | 18/24/28/30/32/36 | ● | ● | | | 80" only | 80" only |
| DOOR SLAB Avanti 202 4H Gold | 1 3/4 | White frosted/ Clear | IN STOK | IN STOK | IN STOK | | IN STOK | | | | | | | | 18/24/28/30/32/36 | ● | ● | | | 80" only | 80" only |
| **Avon French Doors** | | | | | | | | | | | | | | | | | | | | | |
| DOOR SLAB Avon 207 | 1 3/4 | White frosted/ Clear | IN STOK | IN STOK | IN STOK | IN STOK | | | IN STOK | IN STOK | IN STOK | IN STOK | | | 18/24/28/30/32/36 | ● | ● | 80" only | 80" only | 80" only | 80" only |
| DOOR SLAB Avon 5 Lite | 1 3/4 | White frosted/ Clear | IN STOK | IN STOK | IN STOK | IN STOK | | | IN STOK | IN STOK | IN STOK | IN STOK | | | 18/24/28/30/32/36 | ● | ● | 80" only | 80" only | 80" only | 80" only |
| DOOR SLAB Avon 10 Lite | 1 3/4 | White frosted/ Clear | IN STOK | IN STOK | IN STOK | IN STOK | | | IN STOK | IN STOK | IN STOK | IN STOK | | | 18/24/28/30/32/36 | ● | ● | 80" only | 80" only | 80" only | 80" only |
| **Smart Pro French Doors** | | | | | | | | | | | | | | | | | | | | | |
| DOOR SLAB Smart Pro 207 | 1 3/4 | White frosted/ Clear | IN STOK | IN STOK | IN STOK | | | IN STOK | | | | | | | 18/24/28/30/32/36 | ● | ● | 80" only | 80" only | 80" only | 80" only |
| DOOR SLAB Smart Pro 10 Lite | 1 3/4 | White frosted/ Clear | IN STOK | IN STOK | IN STOK | | | IN STOK | | | | | | | 18/24/28/30/32/36 | ● | ● | 80" only | 80" only | 80" only | 80" only |
| DOOR SLAB Smart Pro 5 Lite | 1 3/4 | White frosted/ Clear | IN STOK | IN STOK | IN STOK | | | IN STOK | | | | | | | 18/24/28/30/32/36 | ● | ● | 80" only | 80" only | 80" only | 80" only |

# OPTIMA COLLECTION

| | SLAB THICKNESS | SLAB HEIGHT | | | | COLORS | | | | | | | | AVAILABLE DOOR WIDTH | SMART SWEEP | DOOR CONFIGURATION OPTIONS | | | | | |
|---|---|---|---|---|---|---|---|---|---|---|---|---|---|---|---|---|---|---|---|---|---|
| | | 80 | 84 | 92 1/2 | 96 | Snow White (SW) | Shambor (Sh) | Veralinga Oak (VO) | Ribeira Ash (RA) | Loire Ash (LA) | Pecan Nutwood (PN) | Black Matte (BM) | Gray Matte (GM) | | | Double Swing | Pocket | Bypass | Bi-fold | Magic | Barn |
| DOOR SLAB Optima | 1 3/4 | IN STOK | IN STOK | IN STOK | IN STOK | IN STOK | IN STOK | IN STOK | IN STOK | IN STOK | IN STOK | IN STOK | IN STOK | 18/24/28/30/32/36/42 | ● | ● | ● | ● | ● | 32" and up | ● |
| DOOR SLAB Optima 4H | 1 3/4 | IN STOK | IN STOK | IN STOK | IN STOK | IN STOK | IN STOK | IN STOK | IN STOK | IN STOK | IN STOK | IN STOK | IN STOK | 18/24/28/30/32/36/42 | ● | ● | ● | ● | ● | 32" and up | ● |
| DOOR SLAB Optima 2H | 1 3/4 | IN STOK | IN STOK | IN STOK | IN STOK | IN STOK | IN STOK | IN STOK | IN STOK | IN STOK | IN STOK | IN STOK | IN STOK | 18/24/28/30/32/36/42 | ● | ● | ● | ● | ● | 32" and up | ● |
| DOOR SLAB Otpima 2U | 1 3/4 | IN STOK | IN STOK | IN STOK | IN STOK | IN STOK | IN STOK | IN STOK | IN STOK | IN STOK | IN STOK | IN STOK | IN STOK | 18/24/28/30/32/36/42 | ● | ● | ● | ● | ● | 32" and up | ● |
| DOOR SLAB Otpima 2V | 1 3/4 | IN STOK | IN STOK | IN STOK | IN STOK | IN STOK | IN STOK | IN STOK | IN STOK | IN STOK | IN STOK | IN STOK | IN STOK | 18/24/28/30/32/36/42 | ● | ● | ● | ● | ● | 32" and up | ● |

# AVON COLLECTION

| | SLAB THICKNESS | GLASS | SLAB HEIGHT | | | | COLORS | | | | | | AVAILABLE DOOR WIDTH | SMART SWEEP | DOOR CONFIGURATION OPTIONS | | | | | |
|---|---|---|---|---|---|---|---|---|---|---|---|---|---|---|---|---|---|---|---|---|
| | | | 80 | 84 | 92 1/2 | 96 | Veralinga Oak (VO) | Ribeira Ash (RA) | Loire Ash (LA) | Pecan Nutwood (PN) | Black Matte (BM) | Gray Matte (GM) | | | Single Swing | Double Swing | Pocket | Bypass | Bi-fold | Barn |
| DOOR SLAB Avon 01 | 1 3/4 | | IN STOK | IN STOK | IN STOK | IN STOK | IN STOK | IN STOK | ● | ● | IN STOK | IN STOK | 18/24/28/30/32/36 | | ● | ● | | | ● | ● |
| DOOR SLAB Avon 01 1H | 1 3/4 | | IN STOK | IN STOK | IN STOK | IN STOK | IN STOK | IN STOK | ● | ● | IN STOK | IN STOK | 18/24/28/30/32/36 | | ● | ● | | | ● | ● |
| DOOR SLAB Avon 01 2H | 1 3/4 | | IN STOK | IN STOK | IN STOK | IN STOK | IN STOK | IN STOK | ● | ● | IN STOK | IN STOK | 18/24/28/30/32/36 | | ● | ● | | | ● | ● |
| DOOR SLAB Avon 01 2HN | 1 3/4 | | IN STOK | IN STOK | IN STOK | IN STOK | IN STOK | IN STOK | ● | ● | IN STOK | IN STOK | 18/24/28/30/32/36 | | ● | ● | | | ● | ● |
| DOOR SLAB Avon 01 3H | 1 3/4 | | IN STOK | IN STOK | IN STOK | IN STOK | IN STOK | IN STOK | ● | ● | IN STOK | IN STOK | 18/24/28/30/32/36 | | ● | ● | | | ● | ● |
| DOOR SLAB Avon 01 4H | 1 3/4 | | IN STOK | IN STOK | IN STOK | IN STOK | IN STOK | IN STOK | ● | ● | IN STOK | IN STOK | 18/24/28/30/32/36 | | ● | ● | | | ● | ● |
| DOOR SLAB Avon 07 | 1 3/4 | | IN STOK | IN STOK | IN STOK | IN STOK | IN STOK | IN STOK | ● | ● | IN STOK | IN STOK | 18/24/28/30/32/36 | | ● | ● | 80" only | 80" only | 80" only | 80" only |
| DOOR SLAB Avon 07 R | 1 3/4 | | IN STOK | IN STOK | IN STOK | IN STOK | IN STOK | IN STOK | ● | ● | IN STOK | IN STOK | 18/24/28/30/32/36 | ● | ● | ● | 80" only | 80" only | 80" only | 80" only |
| DOOR SLAB Avon 07 RN | 1 3/4 | | IN STOK | IN STOK | IN STOK | IN STOK | IN STOK | IN STOK | ● | ● | IN STOK | IN STOK | 18/24/28/30/32/36 | ● | ● | ● | 80" only | 80" only | 80" only | 80" only |
| DOOR SLAB Avon 07 2R | 1 3/4 | | IN STOK | IN STOK | IN STOK | IN STOK | IN STOK | IN STOK | ● | ● | IN STOK | IN STOK | 18/24/28/30/32/36 | ● | ● | ● | 80" only | 80" only | 80" only | 80" only |
| DOOR SLAB Avon 07 2RN | 1 3/4 | | IN STOK | IN STOK | IN STOK | IN STOK | IN STOK | IN STOK | ● | ● | IN STOK | IN STOK | 18/24/28/30/32/36 | ● | ● | ● | 80" only | 80" only | 80" only | 80" only |
| DOOR SLAB Avon 07 3R | 1 3/4 | | IN STOK | IN STOK | IN STOK | IN STOK | IN STOK | IN STOK | ● | ● | IN STOK | IN STOK | 18/24/28/30/32/36 | ● | ● | ● | 80" only | 80" only | 80" only | 80" only |
| DOOR SLAB Avon 07 4R | 1 3/4 | | IN STOK | IN STOK | IN STOK | IN STOK | IN STOK | IN STOK | ● | ● | IN STOK | IN STOK | 18/24/28/30/32/36 | ● | ● | ● | 80" only | 80" only | 80" only | 80" only |
| DOOR SLAB Avon 07 1H | 1 3/4 | | IN STOK | IN STOK | IN STOK | IN STOK | IN STOK | IN STOK | ● | ● | IN STOK | IN STOK | 18/24/28/30/32/36 | ● | ● | ● | 80" only | 80" only | 80" only | 80" only |
| DOOR SLAB Avon 07 2H | 1 3/4 | | IN STOK | IN STOK | IN STOK | IN STOK | IN STOK | IN STOK | ● | ● | IN STOK | IN STOK | 18/24/28/30/32/36 | ● | ● | ● | 80" only | 80" only | 80" only | 80" only |
| DOOR SLAB Avon 07 2HN | 1 3/4 | | IN STOK | IN STOK | IN STOK | IN STOK | IN STOK | IN STOK | ● | ● | IN STOK | IN STOK | 18/24/28/30/32/36 | ● | ● | ● | 80" only | 80" only | 80" only | 80" only |
| DOOR SLAB Avon 07 3H | 1 3/4 | | IN STOK | IN STOK | IN STOK | IN STOK | IN STOK | IN STOK | ● | ● | IN STOK | IN STOK | 18/24/28/30/32/36 | ● | ● | ● | 80" only | 80" only | 80" only | 80" only |
| DOOR SLAB Avon 07 4H | 1 3/4 | | IN STOK | IN STOK | IN STOK | IN STOK | IN STOK | IN STOK | ● | ● | IN STOK | IN STOK | 18/24/28/30/32/36 | ● | ● | ● | 80" only | 80" only | 80" only | 80" only |
| DOOR SLAB Avon 01 1H Gold | 1 3/4 | | IN STOK | IN STOK | IN STOK | IN STOK | IN STOK | IN STOK | ● | ● | IN STOK | IN STOK | 18/24/28/30/32/36 | | ● | ● | 80" only | 80" only | 80" only | 80" only |
| DOOR SLAB Avon 01 2H Gold | 1 3/4 | | IN STOK | IN STOK | IN STOK | IN STOK | IN STOK | IN STOK | ● | ● | IN STOK | IN STOK | 18/24/28/30/32/36 | | ● | ● | 80" only | 80" only | 80" only | 80" only |
| DOOR SLAB Avon 01 2HN Gold | 1 3/4 | | IN STOK | IN STOK | IN STOK | IN STOK | IN STOK | IN STOK | ● | ● | IN STOK | IN STOK | 18/24/28/30/32/36 | | ● | ● | 80" only | 80" only | 80" only | 80" only |
| DOOR SLAB Avon 01 3H Gold | 1 3/4 | | IN STOK | IN STOK | IN STOK | IN STOK | IN STOK | IN STOK | ● | ● | IN STOK | IN STOK | 18/24/28/30/32/36 | | ● | ● | 80" only | 80" only | 80" only | 80" only |
| DOOR SLAB Avon 01 4H Gold | 1 3/4 | | IN STOK | IN STOK | IN STOK | IN STOK | IN STOK | IN STOK | ● | ● | IN STOK | IN STOK | 18/24/28/30/32/36 | | ● | ● | 80" only | 80" only | 80" only | 80" only |
| DOOR SLAB Avon 07 1H Gold | 1 3/4 | | IN STOK | IN STOK | IN STOK | IN STOK | IN STOK | IN STOK | ● | ● | IN STOK | IN STOK | 18/24/28/30/32/36 | ● | ● | ● | 80" only | 80" only | 80" only | 80" only |
| DOOR SLAB Avon 07 2H Gold | 1 3/4 | | IN STOK | IN STOK | IN STOK | IN STOK | IN STOK | IN STOK | ● | ● | IN STOK | IN STOK | 18/24/28/30/32/36 | ● | ● | ● | 80" only | 80" only | 80" only | 80" only |
| DOOR SLAB Avon 07 2HN Gold | 1 3/4 | | IN STOK | IN STOK | IN STOK | IN STOK | IN STOK | IN STOK | ● | ● | IN STOK | IN STOK | 18/24/28/30/32/36 | ● | ● | ● | 80" only | 80" only | 80" only | 80" only |
| DOOR SLAB Avon 07 3H Gold | 1 3/4 | | IN STOK | IN STOK | IN STOK | IN STOK | IN STOK | IN STOK | ● | ● | IN STOK | IN STOK | 18/24/28/30/32/36 | ● | ● | ● | 80" only | 80" only | 80" only | 80" only |
| DOOR SLAB Avon 07 4H Gold | 1 3/4 | | IN STOK | IN STOK | IN STOK | IN STOK | IN STOK | IN STOK | ● | ● | IN STOK | IN STOK | 18/24/28/30/32/36 | ● | ● | ● | 80" only | 80" only | 80" only | 80" only |
| DOOR SLAB Avon 101 | 1 3/4 | | IN STOK | IN STOK | IN STOK | IN STOK | IN STOK | IN STOK | ● | ● | IN STOK | IN STOK | 18/24/28/30/32/36 | | ● | ● | 80" only | 80" only | 80" only | 80" only |
| DOOR SLAB Avon 07-01 Vetro | 1 3/4 | White frosted | IN STOK | IN STOK | IN STOK | IN STOK | IN STOK | IN STOK | IN STOK | IN STOK | IN STOK | IN STOK | 18/24/28/30/32/36 | | ● | ● | special spacer | special spacer | ● | ● |
| DOOR SLAB Avon 07-02 Vetro | 1 3/4 | White frosted | IN STOK | IN STOK | IN STOK | IN STOK | IN STOK | IN STOK | IN STOK | IN STOK | IN STOK | IN STOK | 18/24/28/30/32/36 | | ● | ● | special spacer | special spacer | ● | ● |
| DOOR SLAB Avon 07-03 Vetro | 1 3/4 | White frosted | IN STOK | IN STOK | IN STOK | IN STOK | IN STOK | IN STOK | IN STOK | IN STOK | IN STOK | IN STOK | 18/24/28/30/32/36 | | ● | ● | special spacer | special spacer | ● | ● |
| DOOR SLAB Avon 07-04 Vetro | 1 3/4 | White frosted | IN STOK | IN STOK | IN STOK | IN STOK | IN STOK | IN STOK | IN STOK | IN STOK | IN STOK | IN STOK | 18/24/28/30/32/36 | | ● | ● | special spacer | special spacer | ● | ● |
| DOOR SLAB Avon 07-05 Vetro | 1 3/4 | White frosted | IN STOK | IN STOK | IN STOK | IN STOK | IN STOK | IN STOK | IN STOK | IN STOK | IN STOK | IN STOK | 18/24/28/30/32/36 | | ● | ● | special spacer | special spacer | ● | ● |
| DOOR SLAB Avon 07-06 Vetro | 1 3/4 | White frosted | IN STOK | IN STOK | IN STOK | IN STOK | IN STOK | IN STOK | IN STOK | IN STOK | IN STOK | IN STOK | 18/24/28/30/32/36 | | ● | ● | special spacer | special spacer | ● | ● |
| DOOR SLAB Avon 07-07 Vetro | 1 3/4 | White frosted | IN STOK | IN STOK | IN STOK | IN STOK | IN STOK | IN STOK | IN STOK | IN STOK | IN STOK | IN STOK | 18/24/28/30/32/36 | | ● | ● | special spacer | special spacer | ● | ● |
| DOOR SLAB Avon 07-08 Vetro | 1 3/4 | White frosted | IN STOK | IN STOK | IN STOK | IN STOK | IN STOK | IN STOK | IN STOK | IN STOK | IN STOK | IN STOK | 18/24/28/30/32/36 | | ● | ● | special spacer | special spacer | ● | ● |



# MODULAR COLLECTION

| | SLAB THICKNESS | GLASS | SLAB HEIGHT | | | | COLORS | | | | | | AVAILABLE DOOR WIDTH | DOOR CONFIGURATION OPTIONS | | | | | |
|---|---|---|---|---|---|---|---|---|---|---|---|---|---|---|---|---|---|---|---|
| | | | 80 | 84 | 96 | 92 1/2 | Shambor (Sh) | Snow White (SW) | Black Matte (BM) | Gray Matte (GM) | Bianco Noble (BN) | Gray Oak (GO) | | Single Swing | Double Swing | Pocket | Bypass | Bi-fold | Barn |
| DOOR SLAB Leora Vetro | 1 9/16 | White frosted/ Black | IN STOK | IN STOK | IN STOK | IN STOK | | | | | IN STOK | IN STOK | 18/24/28/30/32/36 | ● | ● | special spacer | special spacer | ● | ● |
| DOOR SLAB Alba | 1 9/16 | White frosted/ Black | IN STOK | IN STOK | IN STOK | IN STOK | | | | | IN STOK | IN STOK | 18/24/28/30/32/36 | ● | ● | special spacer | special spacer | ● | ● |
| DOOR SLAB Edna Vetro | 1 9/16 | White frosted/ Black | IN STOK | IN STOK | IN STOK | IN STOK | | | | | IN STOK | IN STOK | 18/24/28/30/32/36 | ● | ● | special spacer | special spacer | ● | ● |
| DOOR SLAB Alda | 1 9/16 | | IN STOK | IN STOK | IN STOK | IN STOK | | | | | IN STOK | IN STOK | 18/24/28/30/32/36 | ● | ● | special spacer | special spacer | ● | ● |
| DOOR SLAB Mirella Vetro | 1 9/16 | White frosted | IN STOK | IN STOK | IN STOK | IN STOK | | | | | IN STOK | IN STOK | 18/24/28/30/32/36 | ● | ● | special spacer | special spacer | ● | ● |
| DOOR SLAB Perla | 1 9/16 | White frosted | IN STOK | IN STOK | IN STOK | IN STOK | | | | | IN STOK | IN STOK | 18/24/28/30/32/36 | ● | ● | special spacer | special spacer | ● | ● |
| DOOR SLAB Romi | 1 9/16 | White frosted | IN STOK | IN STOK | IN STOK | IN STOK | | | | | IN STOK | IN STOK | 18/24/28/30/32/36 | ● | ● | special spacer | special spacer | ● | ● |
| DOOR SLAB Leti | 1 9/16 | White frosted | IN STOK | IN STOK | IN STOK | IN STOK | | | | | IN STOK | IN STOK | 18/24/28/30/32/36 | ● | ● | special spacer | special spacer | ● | ● |
| DOOR SLAB Dome | 1 9/16 | White frosted | IN STOK | IN STOK | IN STOK | IN STOK | | | | | IN STOK | IN STOK | 18/24/28/30/32/36 | ● | ● | special spacer | special spacer | ● | ● |
| DOOR SLAB Berta | 1 9/16 | White frosted | IN STOK | IN STOK | IN STOK | IN STOK | | | | | IN STOK | IN STOK | 18/24/28/30/32/36 | ● | ● | special spacer | special spacer | ● | ● |
| DOOR SLAB Vita | 1 9/16 | White frosted | IN STOK | IN STOK | IN STOK | IN STOK | | | | | IN STOK | IN STOK | 18/24/28/30/32/36 | ● | ● | special spacer | special spacer | ● | ● |
| DOOR SLAB Dora | 1 9/16 | White frosted | IN STOK | IN STOK | IN STOK | IN STOK | | | | | IN STOK | IN STOK | 18/24/28/30/32/36 | ● | ● | special spacer | special spacer | ● | ● |
| DOOR SLAB Rita | 1 9/16 | White frosted | IN STOK | IN STOK | IN STOK | IN STOK | | | | | IN STOK | IN STOK | 18/24/28/30/32/36 | ● | ● | special spacer | special spacer | ● | ● |
| DOOR SLAB Ermi | 1 9/16 | | IN STOK | IN STOK | IN STOK | IN STOK | | | | | IN STOK | IN STOK | 18/24/28/30/32/36 | ● | ● | special spacer | special spacer | ● | ● |
| DOOR SLAB Della Vetro | 1 9/16 | White frosted | IN STOK | IN STOK | IN STOK | IN STOK | | | | | IN STOK | IN STOK | 18/24/28/30/32/36 | ● | ● | special spacer | special spacer | ● | ● |
| DOOR SLAB Leora Vetro | 1 3/4 | White frosted/ Black | IN STOK | IN STOK | IN STOK | IN STOK | IN STOK | IN STOK | IN STOK | IN STOK | | | 18/24/28/30/32/36 | ● | ● | special spacer | special spacer | ● | ● |
| DOOR SLAB Alba | 1 3/4 | White frosted/ Black | IN STOK | IN STOK | IN STOK | IN STOK | IN STOK | IN STOK | IN STOK | IN STOK | | | 18/24/28/30/32/36 | ● | ● | special spacer | special spacer | ● | ● |
| DOOR SLAB Edna Vetro | 1 3/4 | White frosted/ Black | IN STOK | IN STOK | IN STOK | IN STOK | IN STOK | IN STOK | IN STOK | IN STOK | | | 18/24/28/30/32/36 | ● | ● | special spacer | special spacer | ● | ● |
| DOOR SLAB Alda | 1 3/4 | | IN STOK | IN STOK | IN STOK | IN STOK | IN STOK | IN STOK | IN STOK | IN STOK | | | 18/24/28/30/32/36 | ● | ● | special spacer | special spacer | ● | ● |
| DOOR SLAB Mirella Vetro | 1 3/4 | White frosted | IN STOK | IN STOK | IN STOK | IN STOK | IN STOK | IN STOK | IN STOK | IN STOK | | | 18/24/28/30/32/36 | ● | ● | special spacer | special spacer | ● | ● |
| DOOR SLAB Perla | 1 3/4 | White frosted | IN STOK | IN STOK | IN STOK | IN STOK | IN STOK | IN STOK | IN STOK | IN STOK | | | 18/24/28/30/32/36 | ● | ● | special spacer | special spacer | ● | ● |
| DOOR SLAB Romi | 1 3/4 | White frosted | IN STOK | IN STOK | IN STOK | IN STOK | IN STOK | IN STOK | IN STOK | IN STOK | | | 18/24/28/30/32/36 | ● | ● | special spacer | special spacer | ● | ● |
| DOOR SLAB Leti | 1 3/4 | White frosted | IN STOK | IN STOK | IN STOK | IN STOK | IN STOK | IN STOK | IN STOK | IN STOK | | | 18/24/28/30/32/36 | ● | ● | special spacer | special spacer | ● | ● |
| DOOR SLAB Dome | 1 3/4 | White frosted | IN STOK | IN STOK | IN STOK | IN STOK | IN STOK | IN STOK | IN STOK | IN STOK | | | 18/24/28/30/32/36 | ● | ● | special spacer | special spacer | ● | ● |
| DOOR SLAB Berta | 1 3/4 | White frosted | IN STOK | IN STOK | IN STOK | IN STOK | IN STOK | IN STOK | IN STOK | IN STOK | | | 18/24/28/30/32/36 | ● | ● | special spacer | special spacer | ● | ● |
| DOOR SLAB Vita | 1 3/4 | White frosted | IN STOK | IN STOK | IN STOK | IN STOK | IN STOK | IN STOK | IN STOK | IN STOK | | | 18/24/28/30/32/36 | ● | ● | special spacer | special spacer | ● | ● |
| DOOR SLAB Dora | 1 3/4 | White frosted | IN STOK | IN STOK | IN STOK | IN STOK | IN STOK | IN STOK | IN STOK | IN STOK | | | 18/24/28/30/32/36 | ● | ● | special spacer | special spacer | ● | ● |
| DOOR SLAB Rita | 1 3/4 | White frosted | IN STOK | IN STOK | IN STOK | IN STOK | IN STOK | IN STOK | IN STOK | IN STOK | | | 18/24/28/30/32/36 | ● | ● | special spacer | special spacer | ● | ● |
| DOOR SLAB Ermi | 1 3/4 | | IN STOK | IN STOK | IN STOK | IN STOK | IN STOK | IN STOK | IN STOK | IN STOK | | | 18/24/28/30/32/36 | ● | ● | special spacer | special spacer | ● | ● |
| DOOR SLAB Della Vetro | 1 3/4 | White frosted | IN STOK | IN STOK | IN STOK | IN STOK | IN STOK | IN STOK | IN STOK | IN STOK | | | 18/24/28/30/32/36 | ● | ● | special spacer | special spacer | ● | ● |

# OXFORD COLLECTION

| | SLAB THICKNESS | SLAB HEIGHT | | | | COLORS | | | | | | | AVAILABLE DOOR WIDTH | SMART SWEEP | DOOR CONFIGURATION OPTIONS | | | | | |
|---|---|---|---|---|---|---|---|---|---|---|---|---|---|---|---|---|---|---|---|---|
| | | 80 | 84 | 92 1/2 | 96 | Snow White (SW) | Veralinga Oak (VO) | Ribeira Ash (RA) | Loire Ash (LA) | Pecan Nutwood (PN) | Black Matte (BM) | Gray Matte (GM) | | | Single Swing | Double Swing | Pocket | Bypass | Bi-fold | Barn |
| DOOR SLAB Oxford UNO 07 | 1 3/4 | IN STOK | IN STOK | IN STOK | IN STOK | IN STOK | IN STOK | IN STOK | IN STOK | IN STOK | IN STOK | IN STOK | 18/24/28/30/32/36 | ● | ● | ● | 80" only | 80" only | 80" only | 80" only |
| DOOR SLAB Oxford UNO 07 R | 1 3/4 | IN STOK | IN STOK | IN STOK | IN STOK | IN STOK | IN STOK | IN STOK | IN STOK | IN STOK | IN STOK | IN STOK | 18/24/28/30/32/36 | ● | ● | ● | 80" only | 80" only | 80" only | 80" only |
| DOOR SLAB Oxford UNO 07 RN | 1 3/4 | IN STOK | IN STOK | IN STOK | IN STOK | IN STOK | IN STOK | IN STOK | IN STOK | IN STOK | IN STOK | IN STOK | 18/24/28/30/32/36 | ● | ● | ● | 80" only | 80" only | 80" only | 80" only |
| DOOR SLAB Oxford UNO 07 2R | 1 3/4 | IN STOK | IN STOK | IN STOK | IN STOK | IN STOK | IN STOK | IN STOK | IN STOK | IN STOK | IN STOK | IN STOK | 18/24/28/30/32/36 | ● | ● | ● | 80" only | 80" only | 80" only | 80" only |
| DOOR SLAB Oxford UNO 07 2RN | 1 3/4 | IN STOK | IN STOK | IN STOK | IN STOK | IN STOK | IN STOK | IN STOK | IN STOK | IN STOK | IN STOK | IN STOK | 18/24/28/30/32/36 | ● | ● | ● | 80" only | 80" only | 80" only | 80" only |
| DOOR SLAB Oxford UNO 07 3R | 1 3/4 | IN STOK | IN STOK | IN STOK | IN STOK | IN STOK | IN STOK | IN STOK | IN STOK | IN STOK | IN STOK | IN STOK | 18/24/28/30/32/36 | ● | ● | ● | 80" only | 80" only | 80" only | 80" only |
| DOOR SLAB Oxford UNO 07 4R | 1 3/4 | IN STOK | IN STOK | IN STOK | IN STOK | IN STOK | IN STOK | IN STOK | IN STOK | IN STOK | IN STOK | IN STOK | 18/24/28/30/32/36 | ● | ● | ● | 80" only | 80" only | 80" only | 80" only |
| DOOR SLAB Oxford DUO 07 | 1 3/4 | IN STOK | IN STOK | IN STOK | IN STOK | IN STOK | IN STOK | IN STOK | IN STOK | IN STOK | IN STOK | IN STOK | 18/24/28/30/32/36 | ● | ● | ● | 80" only | 80" only | 80" only | 80" only |
| DOOR SLAB Oxford DUO 07 R | 1 3/4 | IN STOK | IN STOK | IN STOK | IN STOK | IN STOK | IN STOK | IN STOK | IN STOK | IN STOK | IN STOK | IN STOK | 18/24/28/30/32/36 | ● | ● | ● | 80" only | 80" only | 80" only | 80" only |
| DOOR SLAB Oxford DUO 07 RN | 1 3/4 | IN STOK | IN STOK | IN STOK | IN STOK | IN STOK | IN STOK | IN STOK | IN STOK | IN STOK | IN STOK | IN STOK | 18/24/28/30/32/36 | ● | ● | ● | 80" only | 80" only | 80" only | 80" only |
| DOOR SLAB Oxford DUO 07 2R | 1 3/4 | IN STOK | IN STOK | IN STOK | IN STOK | IN STOK | IN STOK | IN STOK | IN STOK | IN STOK | IN STOK | IN STOK | 18/24/28/30/32/36 | ● | ● | ● | 80" only | 80" only | 80" only | 80" only |
| DOOR SLAB Oxford DUO 07 2RN | 1 3/4 | IN STOK | IN STOK | IN STOK | IN STOK | IN STOK | IN STOK | IN STOK | IN STOK | IN STOK | IN STOK | IN STOK | 18/24/28/30/32/36 | ● | ● | ● | 80" only | 80" only | 80" only | 80" only |
| DOOR SLAB Oxford DUO 07 3R | 1 3/4 | IN STOK | IN STOK | IN STOK | IN STOK | IN STOK | IN STOK | IN STOK | IN STOK | IN STOK | IN STOK | IN STOK | 18/24/28/30/32/36 | ● | ● | ● | 80" only | 80" only | 80" only | 80" only |
| DOOR SLAB Oxford DUO 07 4R | 1 3/4 | IN STOK | IN STOK | IN STOK | IN STOK | IN STOK | IN STOK | IN STOK | IN STOK | IN STOK | IN STOK | IN STOK | 18/24/28/30/32/36 | ● | ● | ● | 80" only | 80" only | 80" only | 80" only |

# CITY COLLECTION

| | SLAB THICKNESS | SLAB HEIGHT | | | | COLORS | | AVAILABLE DOOR WIDTH | SMART SWEEP | DOOR CONFIGURATION OPTIONS | | | | | | |
|---|---|---|---|---|---|---|---|---|---|---|---|---|---|---|---|---|
| | | 80 | 84 | 92 1/2 | 96 | Bianco Noble (BN) | Gray Oak (GO) | | | Single Swing | Double Swing | Pocket | Bypass | Bi-fold | Magic | Barn |
| DOOR SLAB Palladio | 1 9/16 | IN STOK | IN STOK | IN STOK | IN STOK | IN STOK | IN STOK | 18/24/28/30/32/36/42 | ● | ● | ● | ● | ● | ● | 32" and up | ● |
| DOOR SLAB Palladio 4H | 1 9/16 | IN STOK | IN STOK | IN STOK | IN STOK | IN STOK | IN STOK | 18/24/28/30/32/36/42 | ● | ● | ● | ● | ● | ● | 32" and up | ● |
| DOOR SLAB Palladio 2H | 1 9/16 | IN STOK | IN STOK | IN STOK | IN STOK | IN STOK | IN STOK | 18/24/28/30/32/36/42 | ● | ● | ● | ● | ● | ● | 32" and up | ● |
| DOOR SLAB Palladio 2U | 1 9/16 | IN STOK | IN STOK | IN STOK | IN STOK | IN STOK | IN STOK | 18/24/28/30/32/36/42 | ● | ● | ● | ● | ● | ● | 32" and up | ● |
| DOOR SLAB Palladio 2V | 1 9/16 | IN STOK | IN STOK | IN STOK | IN STOK | IN STOK | IN STOK | 18/24/28/30/32/36/42 | ● | ● | ● | ● | ● | ● | 32" and up | ● |
| DOOR SLAB Unica 2V | 1 9/16 | IN STOK | IN STOK | IN STOK | IN STOK | IN STOK | IN STOK | 18/24/28/30/32/36/42 | | ● | ● | | | ● | | |
| DOOR SLAB Unica | 1 9/16 | IN STOK | IN STOK | IN STOK | IN STOK | IN STOK | IN STOK | 18/24/28/30/32/36/42 | | ● | ● | | | ● | | |
| DOOR SLAB Unica 2U | 1 9/16 | IN STOK | IN STOK | IN STOK | IN STOK | IN STOK | IN STOK | 18/24/28/30/32/36/42 | | ● | ● | | | ● | | |



# EXOTIC WOOD COLLECTION

| | SLAB THICKNESS | SLAB HEIGHT | | | COLORS | AVAILABLE DOOR WIDTH | SMART SWEEP | DOOR CONFIGURATION OPTIONS | | | | | | |
|---|---|---|---|---|---|---|---|---|---|---|---|---|---|---|
| | | 80 | 84 | 92 1/2 | Black Apricot (BA) | | | Single Swing | Double Swing | Pocket | Bypass | Bi-fold | Magic | Barn |
| DOOR SLAB Avanti | 1 3/4 | ● | ● | ● | ● | 18/24/28/30/32/36 | ● | ● | ● | ● | ● | ● | 32" and up | ● |
| DOOR SLAB Avanti 4H | 1 3/4 | ● | ● | ● | ● | 18/24/28/30/32/36 | ● | ● | ● | ● | ● | ● | 32" and up | ● |
| DOOR SLAB Avanti 2H | 1 3/4 | ● | ● | ● | ● | 18/24/28/30/32/36 | ● | ● | ● | ● | ● | ● | 32" and up | ● |
| DOOR SLAB Avanti 2V | 1 3/4 | ● | ● | ● | ● | 18/24/28/30/32/36 | ● | ● | ● | ● | ● | ● | 32" and up | ● |
| DOOR SLAB Avanti 2U | 1 3/4 | ● | ● | ● | ● | 18/24/28/30/32/36 | ● | ● | ● | ● | ● | ● | 32" and up | ● |

# EXTERIOR DOOR

| | SLAB THICKNESS | SLAB HEIGHT | COLORS | | |
|---|---|---|---|---|---|
| | | | Anthracite/White (A/W) | Black/White (B/W) | Brown/White (Br/W) |
| Modern Front Steel Door ARGOS | 2 1/16 | 79 7/8 | ● | ● | ● |
| Modern Front Steel Door AURA | 2 1/16 | 79 7/8 | ● | ● | ● |
| Modern Front Steel Door ZEPHYR | 2 1/16 | 79 7/8 | ● | ● | ● |

# PRIMED COLLECTION

| | SLAB THICKNESS | SLAB HEIGHT | | | | | COLORS | AVAILABLE DOOR WIDTH | SMART SWEEP | DOOR CONFIGURATION OPTIONS | | | | | | |
|---|---|---|---|---|---|---|---|---|---|---|---|---|---|---|---|---|
| | | 80 | 84 | 92 1/2 | 96 | 108 | Primed | | | Single Swing | Double Swing | Pocket | Bypass | Bi-fold | Magic | Barn |
| DOOR SLAB Flush | 1 3/4 | IN STOK | IN STOK | IN STOK | IN STOK | ● | ● | 18/24/28/30/32/36/42 | ● | ● | | | | | | ● |
| DOOR SLAB Shaker 1 Panel | 1 3/4 | IN STOK | | | IN STOK | | ● | 18/24/28/30/32/36 | ● | ● | ● | ● | ● | ● | ● | ● |
| DOOR SLAB Shaker 2 Panel | 1 3/4 | IN STOK | | | IN STOK | | ● | 18/24/28/30/32/36 | ● | ● | ● | ● | ● | ● | ● | ● |

# INTERIOR DOOR CONFIGURATIONS

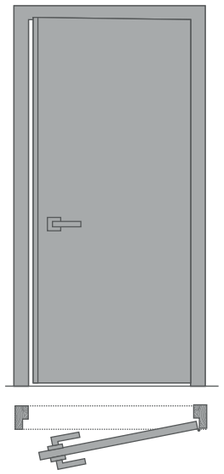

Swing

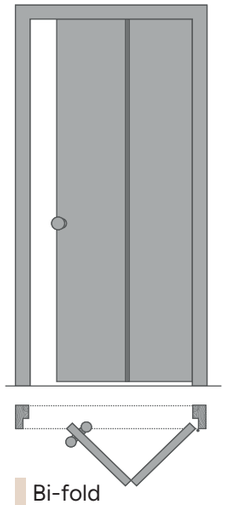

Bi-fold

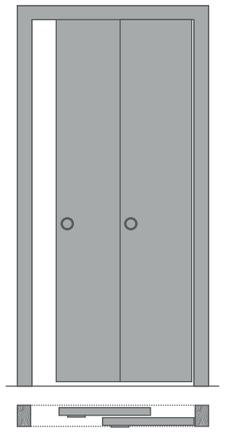

Bypass

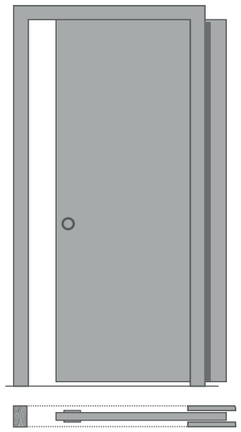

Pocket

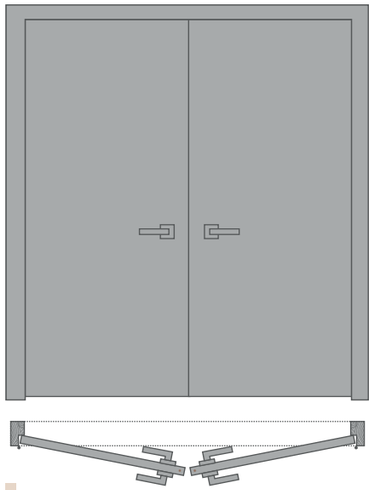

Double swing

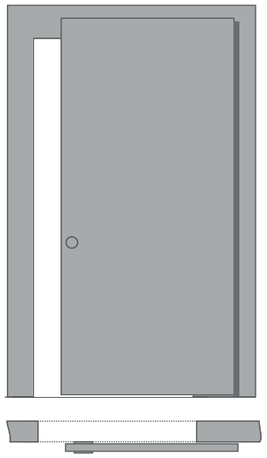

Hidden Barn

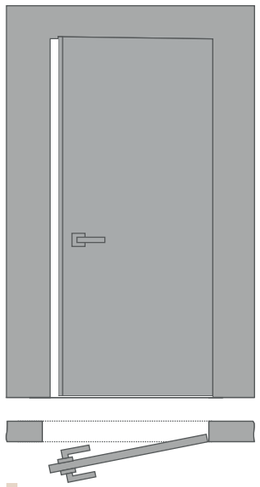

Frameless

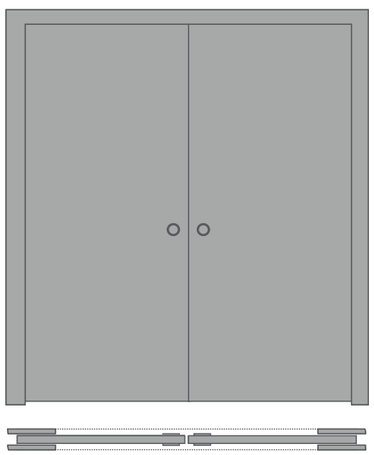

Double pocket

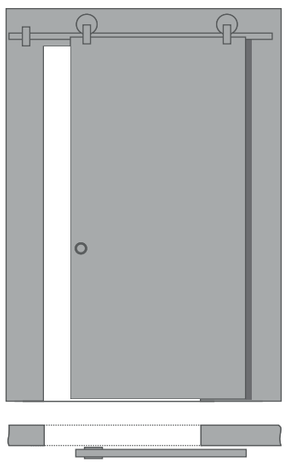

Barn



# BELLDINNI HANDLE

HORIZONT
BLACK

FIORD
MATT CHROME

HORIZONT
WHITE

FIORD
CHROME

HORIZONT
MATT CHROME

SKY USS
FLORENTINE GOLD

ROCK KM
BLACK

SKY USS
BLACK

ROCK KM
WHITE

SKY USS
WHITE

ROCK KM
NICKEL/POLISHED CHROME

MORI USS
FLORENTINE GOLD

ROCK KM
BRONZE/POLISHED GOLD

MORI USS
CHROME

MORI USS
BLACK

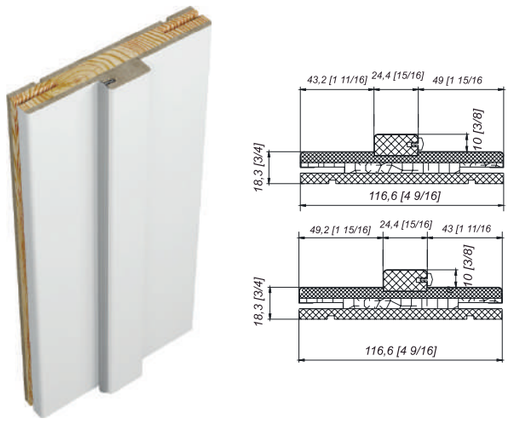


Jamb Type 80/4/116 (groove 49 and 43)

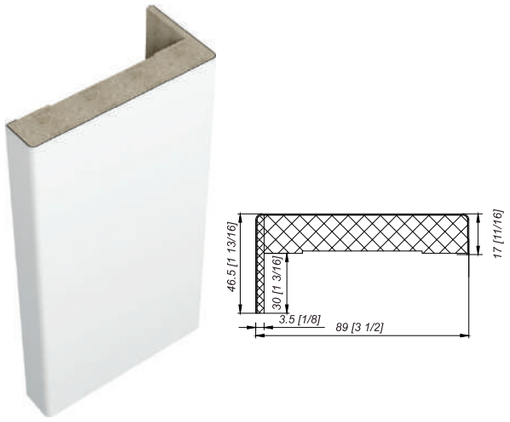


Casing-L Telescope Wide 16

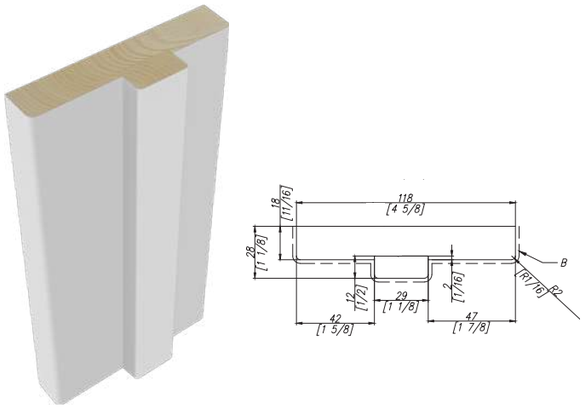


Jamb type SHAKER 80/118 (groove 46) (Primed)

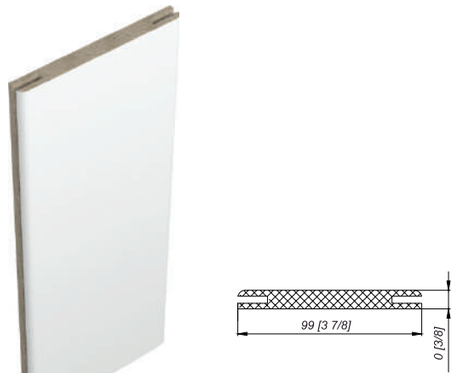


Extension Type 8/1

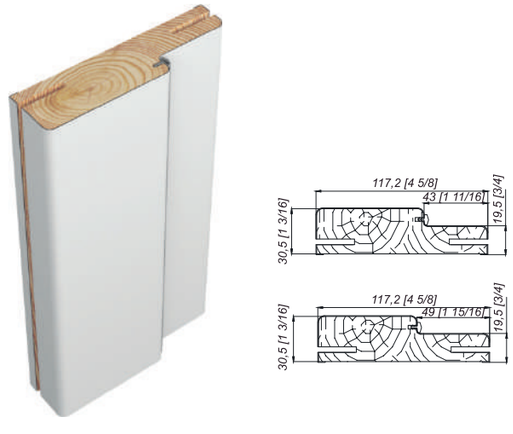


Jamb Type 80/5/116 (groove 49 and 43)

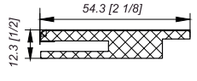


Extension Type 8





Jamb Type 80/4/116
Telescopic Casing

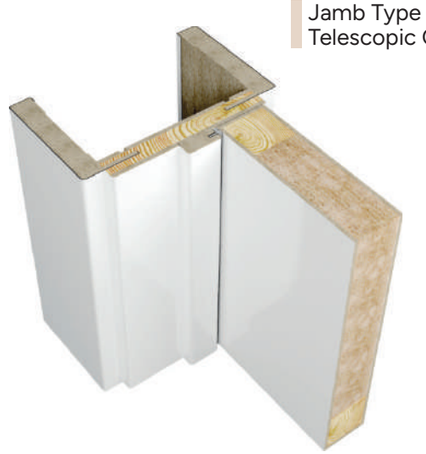

Jamb Type 80/5/116
Telescopic Casing

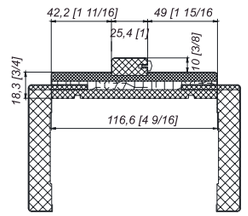


The frame is for slab thickness of 1 3/4 inch

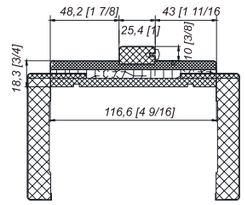


The frame is for slab thickness of 1 9/16 inch

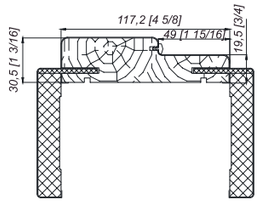


The frame is for slab thickness of 1 3/4 inch

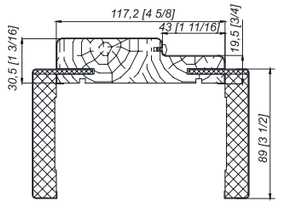


The frame is for slab thickness of 1 9/16 inch

Invisible frame

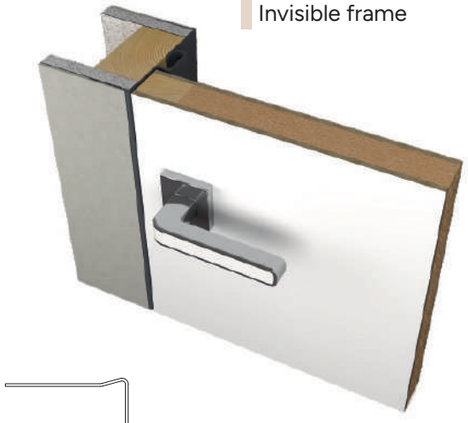

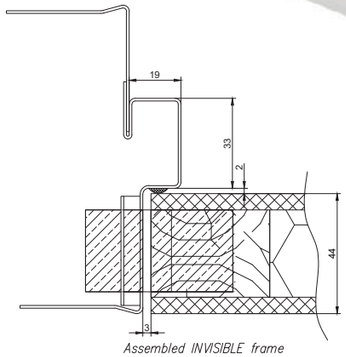


Assembled INVISIBLE frame
Door Slab
Otlav Invisacta300 3D

Invisible frame
REVERSE

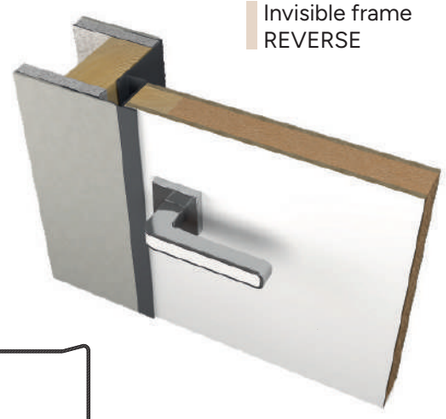

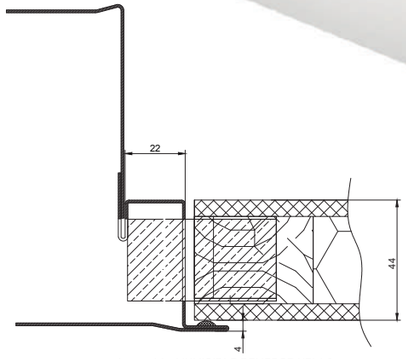


Assembled INVISIBLE REVERSE NEW frame
Door Slab
Otlav Invisacta300 3D

## LOCK FUNCTIONALITY FOR POCKET DOORS

Passage

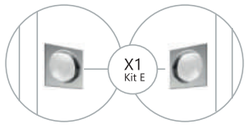


Privacy

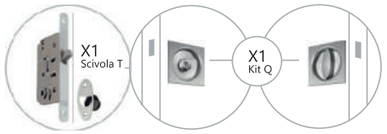


Keyed

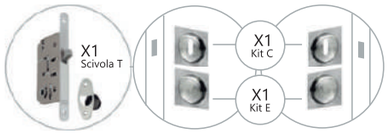


## MAGNETIC LOCKS FUNCTIONALITY

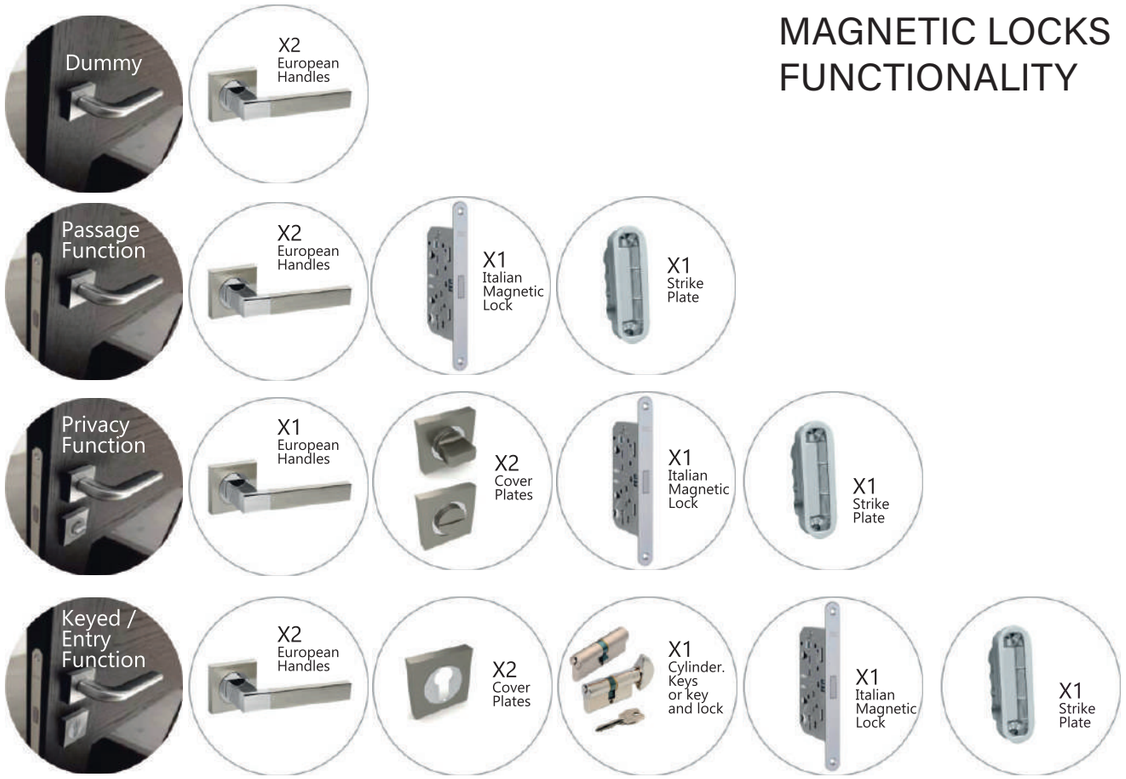

## HINGES

Concealed hinges

3D Adjustable

Concealed

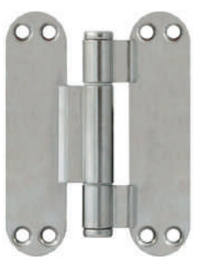

Universal plain
bearing hinges

**Belldinni Inc**
**7025 Central Highway,**
**Pennsauken Township**
**NJ 08109**
**Tel: (908) 868-7877**
**Info@belldinni.com**